Submersible Level Transmitter

MPM416W

Features

- Separate construction; full sealed stainless steel construction for submersible/inserted sensor; aluminum-alloy electric connection box; easy for installation, wiring and calibration;
- Explosion-proof version product conforms to Exia Ⅱ CT6 of Standard GB3836.4; Explosion-proof Certificate is issued
- Ship-use product conforms to CCS Rules of Classification of Sea-going Steel Ships(2006); Ship-use Product Certificate is issued;
- CE Certificate

Introduction

MPM416W Submersible Level Transmitters use high performance piezoresistive pressure sensor as sensing elements. It measures liquid static pressure accurately which is positive proportional to liquid depth, transmitting pressure signal into standard current/ voltage output signal by amplifier circuit board. The product has high accuracy, compact size and easy operation characteristics, and it can be submersible into the liquid to measure level from transmitter bottom to liquid surface. It is widely used for the liquid measure and control of both petroleum, chemi-industry, power station, city water supply and drainage and hydrology.

Load Characteristic

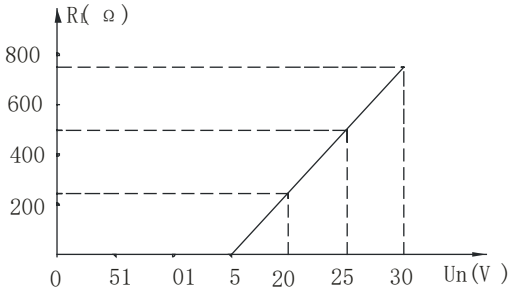

2-wire

4mA~20mADC output

15V~30VDC power supply

$$R_L \leqslant \frac{U_n - 15V}{20mA} \times 10^3 (\Omega)$$

MICROSENSOR

Specifications

Pressure range	1, 2, 5, 10, 20, 50, 100, 200mH_2O			
Overpressure	1.5times FS			
Accuracy	±0.25%FS(typ.) ±0.5%FS(max.)			
Stability error	±0.1%FS(typ.) ±0.2%FS(max.) pressure range>10mH_2O			
	±10mmH_2O(typ.) ±20mmH_2O(max.) pressure range≤10mH_2O			
Temp. drift		Zero drift,± %FS/℃		Sensitivitydrift,±%FS/℃
	Range>10mH_2O	0.005(typ.)	0.01(max.)	0.02(max.)
	Range ≤10mH_2O	0.01(typ.)	0.02(max.)	0.02(max.)
	Range ≤5mH_2O	0.015(typ.)	0.03(max.)	0.02(max.)
	Range ≤2mH_2O	0.025(typ.)	0.05(max.)	0.02(max.)
Transmitting	2-wire		3-wire	3-wire
Power supply	15~28VDC(Intrinsic safe version is supplied through safe barrier)			
Output signal	4~20mADC		0~10/20mADC	0/1~5/10VDC
Load(Ω)	<(U-15)/0.02A		<(U-15)/0.02A	>5k
Material contacting with media	Housing: stainless steel 1Cr18Ni9Ti			O-ring: Viton
	Diaphragm: stainless steel 316L			Rubber casing: NBR
	Cable: Φ7.2mm PVC/Polyurethane cable with vented tube			
Operation temp.	-30℃ ~80℃ -10℃ ~70℃ -10℃ ~60℃			
Storage temp.	-40℃ ~120℃ -20℃ ~85℃			
Protection	IP68(sensor part), IP65(wiring part)			
Ex-proof class	Exia Ⅱ CT6			

Outline Construction (Unit: mm)

Outline dimension

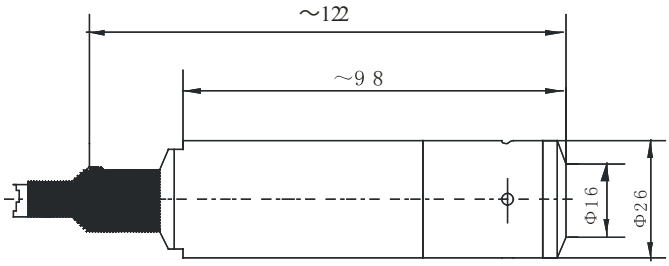

Outline and Installation Dimension of Electric Housing

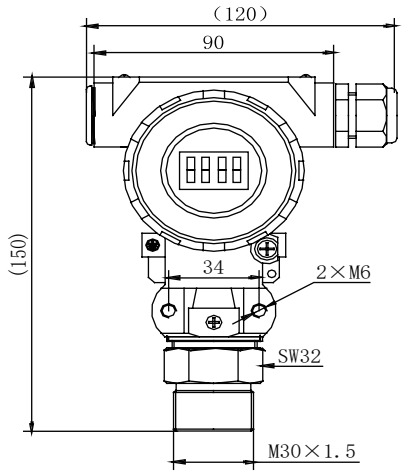

Electrical Connection

Terminal connection in Electrical Housing

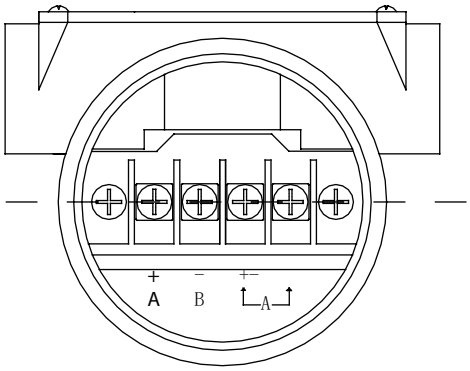

Current		Voltage	
Terminal	Definition	Terminal	Definition
+/A	V+	+/A	V+
-/B	IO	-/B	OUT
		A	GND

Application Example

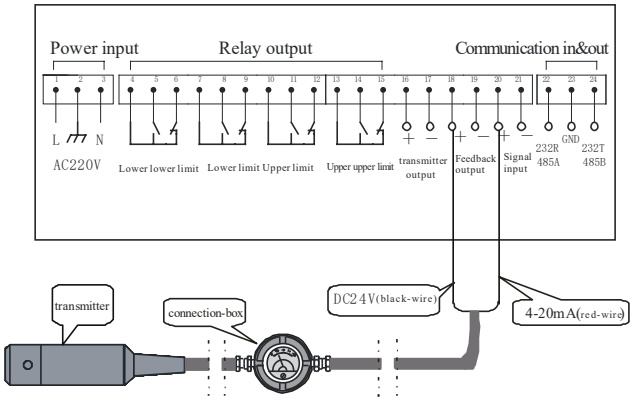

Connecting level transmitter with measure displayer to build up one measure and control system.

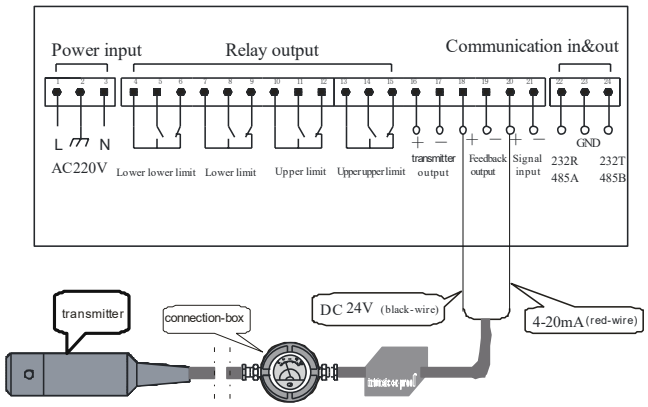

Connecting Ex-proof version transmitter with safe barrier and measure displayer to build up measure and control system;

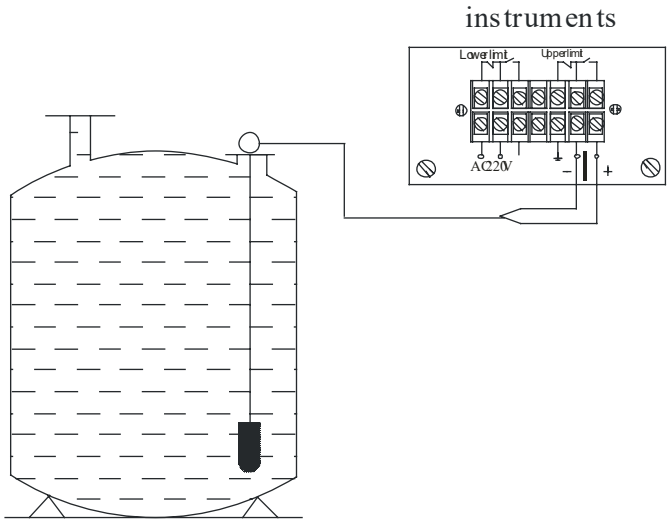

When measure static level in open tank, put level transmitter into tank bottom, and fix transmitter cable and connection box at the open tank entrance.

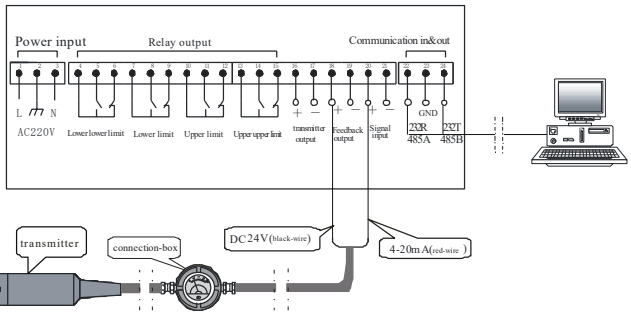

Connecting with MSB9418 measure displayer to build up one liquid measure and control system with upper and lower limits alarming. Meanwhile, the displayer could output RS232 or analog signal 1V~5VDC, 0V~5VDC, 4mA~20mADC.

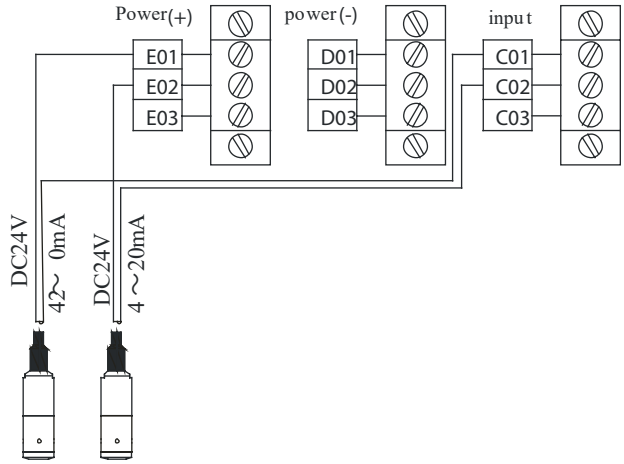

1#transmitter 2#transmitter

Connecting the most two level transmitter with MSB9438 measure displayer to build up one level difference system with multi-channel display. It can also output 4mA~20mADC analog output and provide upper and lower limit alarming and control.

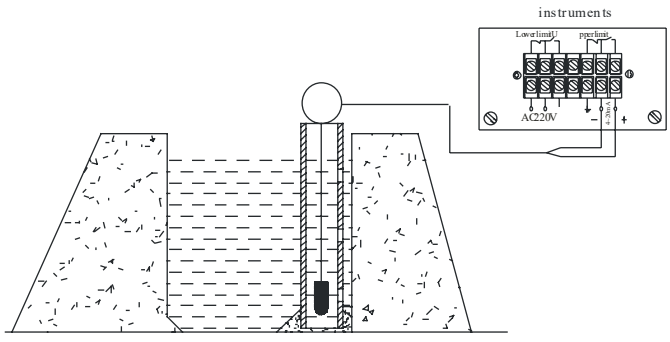

When measuring flow water, insert one steel tube Φ45 which has little holes Φ5 at different heights. Make holes opposite to water flowing direction, and let water go into the tube and fix cable and connection box at the entrance of tube.

Installation at Local Place (Unit: mm)

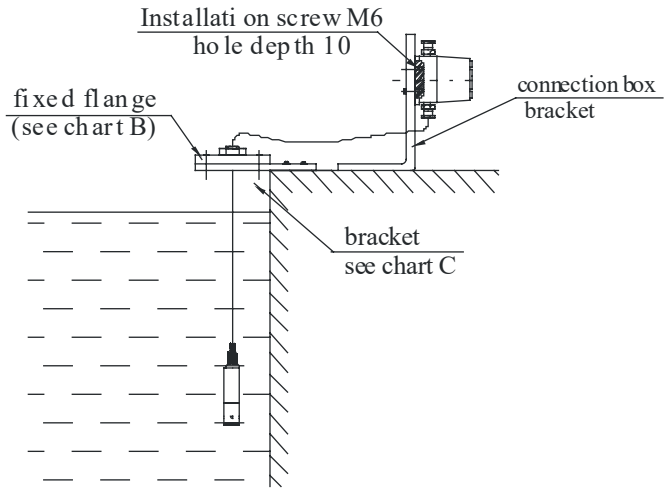

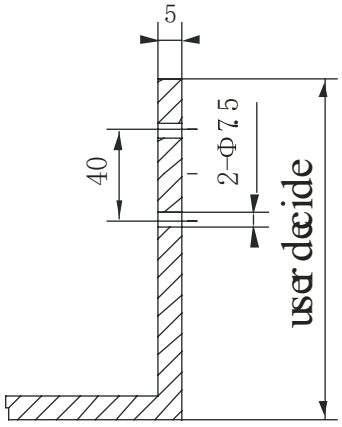

ChartA (user decide)

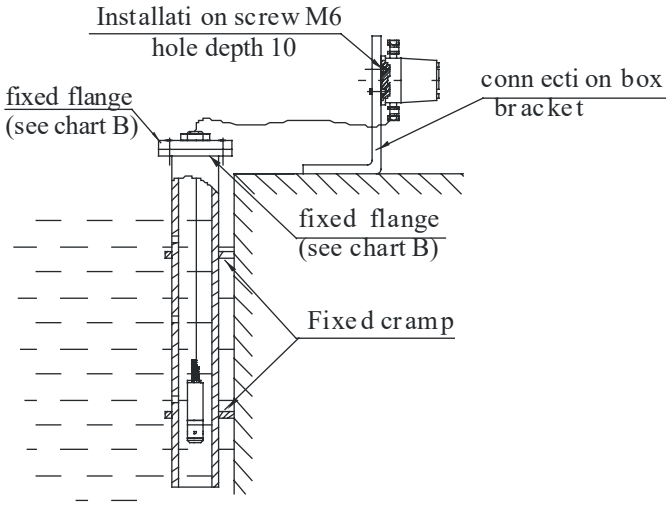

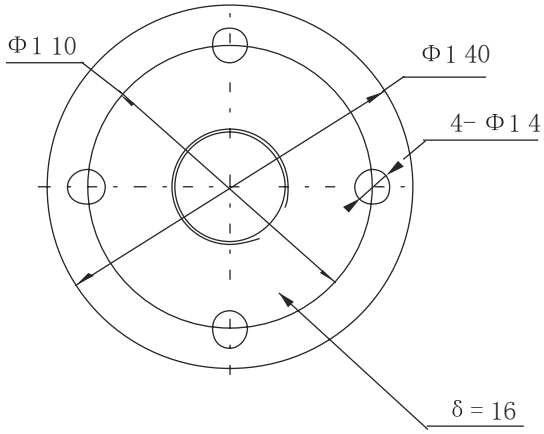

ChartB (Enclosed by factory or user decide)

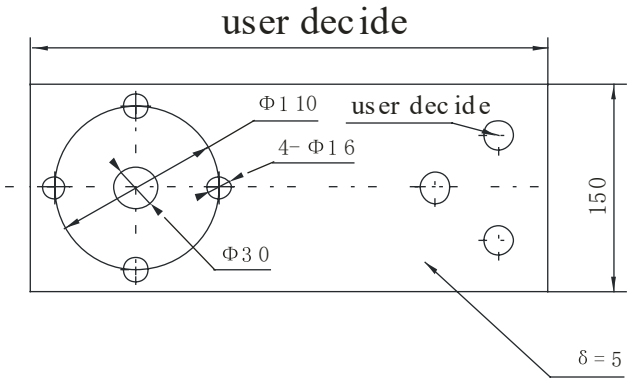

ChartA (user decide)

Order Guide

MPM416W	Submersible Level Transmitter				
	Range(mH_2O)	[0~X mH_2O]L	L: cable length, suggested: L-X=(1~2)m		
		Code	Output signal		
		E	4~20mADC		
		F	1~5VDC		
		J	0~5VDC		
		Q	0~10mADC		
		U	0~20mADC		
		V	0~10VDC		
		Code	Construction material		
			Diaphragm	Pressure port	Housing
		22	SS 316L	SS	SS
		25	Tantalum	SS	SS
			Code	Others	
			M_1	0~100% hand pointer indicator	
			i	Intrinsic safe version Exia Ⅱ CT6	
			C_1	M20×1.5 male, face type seal	
			C_3	G1/2 male	
			C_5	M20×1.5 male, waterline seal	
			T	Ship-use	
			F_1	Fixed flange	
MPM416W	[0~3mH_2O]5	E	22	iC_1	the whole spec

Notes

1.Please pay attention if the media is compatible with contacting material, especially pay attention to media density at measuring situation (except water);

2.The cable material is optional,including Polyethylene-(PE), Polyurethane(PUR), PVC and Teflon etc. If there is no special requirement, the default cable material is Polyethylene(PE);

3.If the product is installed in lightning and thunder area, please note “lightning Protection” in the order; we suggest to use lightning protection device to make sure power is grounding safely;

4.If the user has special requirement, please feel free to contact with our company.